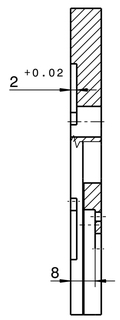

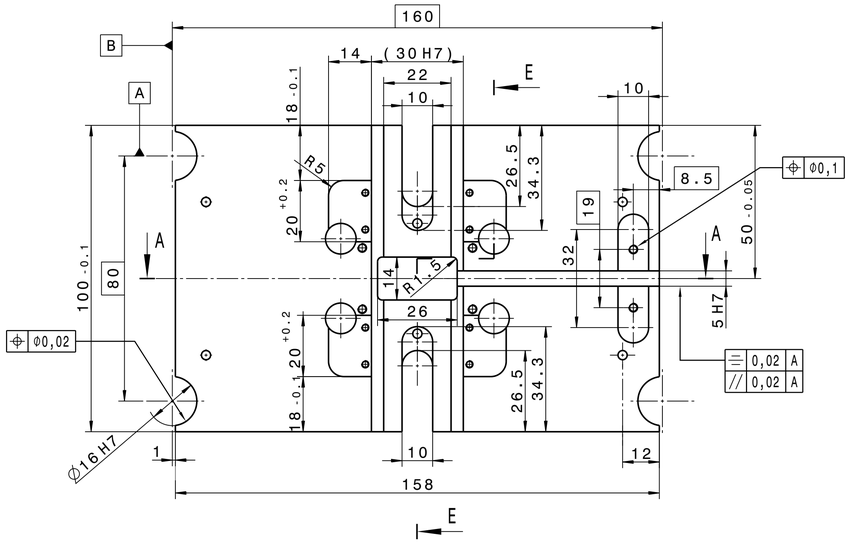

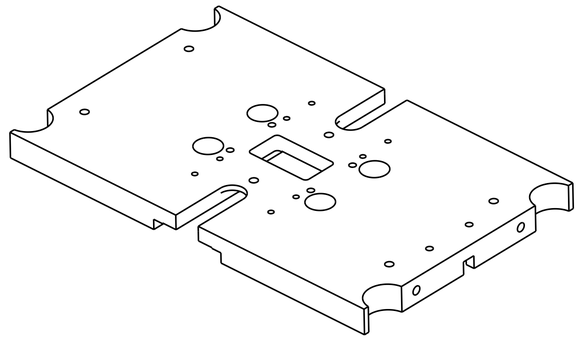

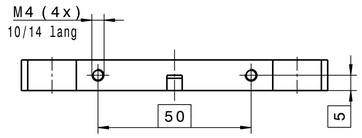

A-A

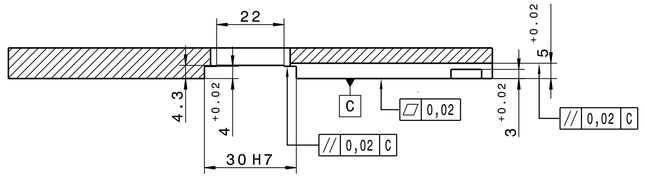

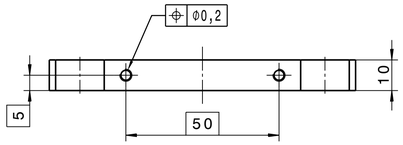

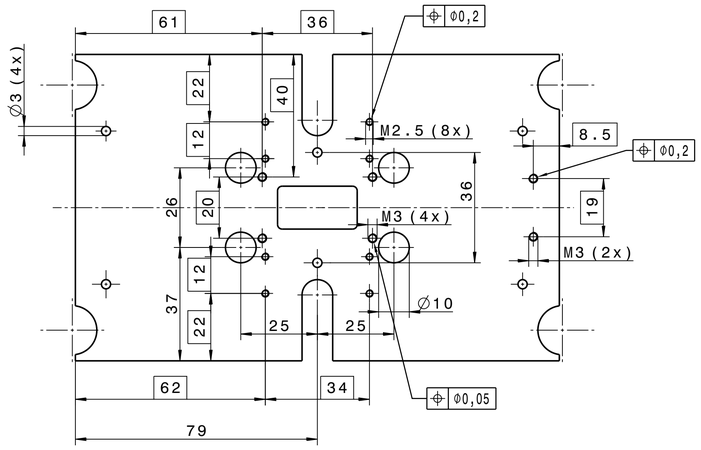

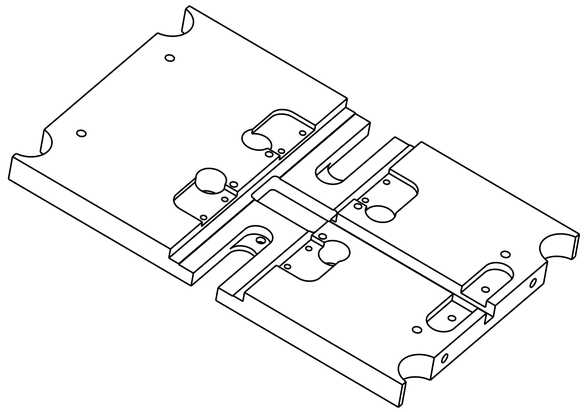

15µm versilbert
ultraschallgereinigt
Fertigung entsprechend
beiliegenden Spezifikationen 04/1, 05/1, 07/1

Kanten ISO 13715 $^{+0.3}_{-0.1}$ $^{-0.3}_{-0.1}$ Rz6.3 (alle Passungen Rz1.0)

Copying of this document and giving it to others and the use of communication of the contents thereof are forbidden without express authority. Offenders are liable to the payment of damages. All rights are reserved in the event of the grant of a patent or the registration of a utility model or design.

GSI
Helmholtzzentrum für Schwerionenforschung GmbH
Planckstrasse 1, 64291 Darmstadt

	Date	Name
Drawn	27.03.2013	Dorn, C.
Checked		
Approved		

IP

Projection	Rev. No.	Rev.-Doc.-No.	Date	Name
	A		23.04.2013	Dorn, C.

Surfaces: DIN ISO 1302

For information

Dimensions without tolerance indication: DIN ISO 2768-mK, EN ISO 13920-BF

Weight

Material: 1.4301 (X5CrNi18-10)

Scale: 1:1

Description: Grundplatte

Size: A1

Drawing No.: STD-000-L01.151.001

Rev.: A

Sheet 1 of 1

Prev. Dwg. -

Repl. for -